© 2017 Baltimore Aircoil International nv

TVFC

TVFC adiabatic cooler

1. Fan-motor combination
2. Left coil
3. Right coil
4. Pre-cooling pad
5. Adiabatic controller
6. Immersion sensor
7. Air sensor
8. Solenoid valve
9. City water flow regulating valve

Only for Pre-cooler with recirculation

10. Electric water level control
11. Pump
12. Pump flow switch
13. Strainer
14. Flow regulating valve pump
15. Ball drain valve

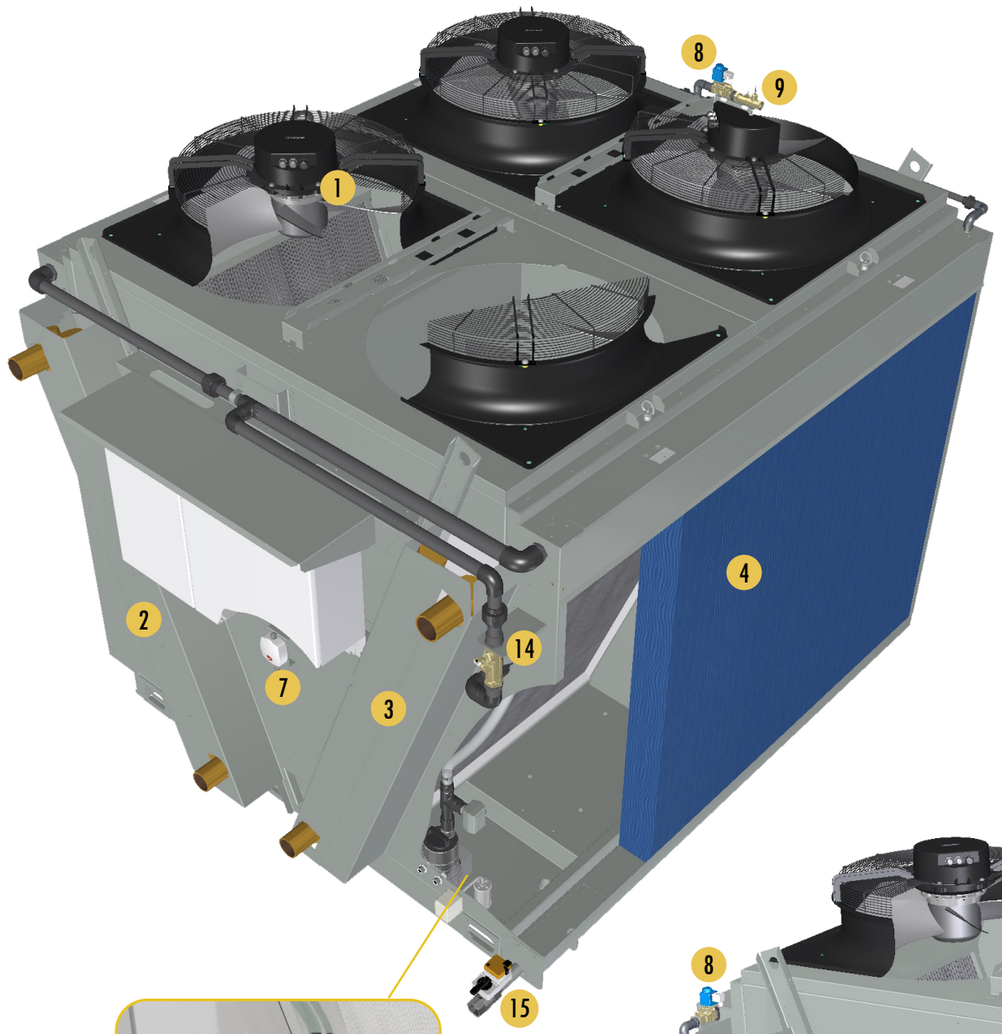

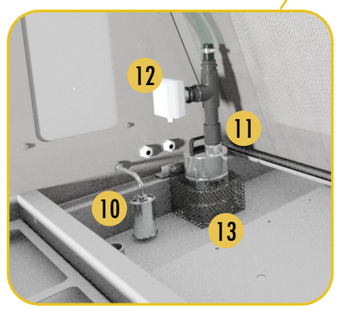

Pre-cooler with recirculation

Once-Through Pre-cooler

Client contact information

Name _____

Company _____

Telephone _____

Email _____

Unit model _____

Serial number _____

Your BAC contact

Name _____

Telephone _____

Email _____

This is not an official order form.

BAC approved • YEAR-ROUND RELIABLE OPERATION • BAC approved

Spare parts for adiabatic cooler